EN60598 IK08 IP66 RoHS CE **RIM 1024 07 757 R3 550 9006 0 * xx**

RIMANO

Due to latest LED technology, proven technology of street lighting and the reduced weight of the luminaire the LED street light RIMANO offers maximum adaptability to individual lighting applications. Therefore RIMANO is not only cost- and energy-efficient but also easy to install and maintain.

Technical Data

Material	AlSi12, Top: Polycarbonat (AlSi12 on request)
Housing color	RAL 9006
Glass cover	safety flat glass
Application / optics	narrow street / R3
LED lifetime	L80 > 100 000 h
SDCM	MacAdam 5
Mounting	Side entry / Post top combined
Bracket diameter	42 / 60 / 76 mm (to be defined at order)
Tilting angle	+ 10° to -20°/ +-20°, adjustable in 5° steps
Weight	9,7 kg
Windage Area	0,067 m²
Temperature	-40°C to +50°C
Nominal voltage	220 - 240 VAC 50/60 Hz

Light file

RIM 1024 757 R3 550

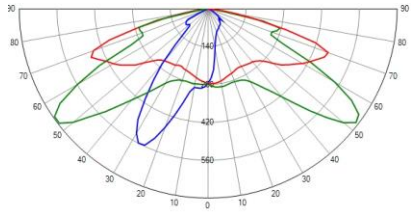

more on the Internet

Specific data

Color temperature	5700 K
CRI	75
System light output	4550 lm
Power consumption	40,7 W
Ø 0 h - 80 000 h	43,9 W
> 80 000 h	47,1 W
System efficacy	112 lm/W
LED current	550 mA
cos Phi	0,97
Driver typ	TR60
Surge protection	10kV / 6 kV [1]
Inrush current	53 A

* Functions (more on request)
21 on / off
25 Luna Dimmer
33 Dali integrated

all values at Ta =25°C
[1] *Common Mode / Differential Mode*

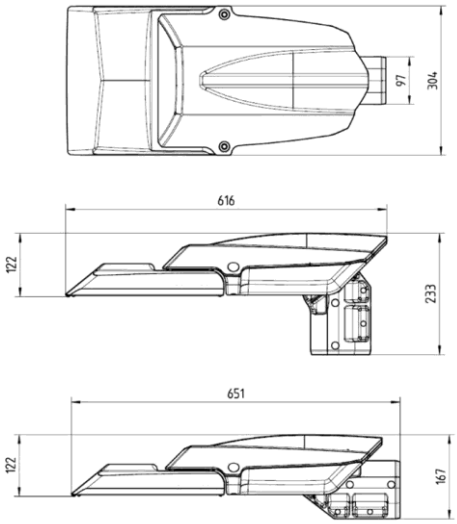

Dimensional Drawing in mm

SWARCO FUTURIT Verkehrssignalsysteme GesmbH
Vertrieb I Technik I Verwaltung, Mühlgasse 86, A-2380 Perchtoldsdorf, Austria, T. +43-1-8957924, F. +43-1-8942148
Produktion I Einkauf, Manfred-Swarovski-Straße 1, A-7343 Neutal, Austria, T. +43-2618-20025-0, F. +43-2618-20025-50
E: office.futurit@swarco.com, www.swarco.com

Changes, literal errors reserved