**EN60598 IK08 IP66** RoHS **LUN 1024 P6 740 R3 400 9006 0 * yy**

## LUNIA

With a modern, timeless design LUNIA LED street light can easily be recognized by its individual, unostentatious shape. LUNIA combines highest technical demands and design in a single high-quality product.

### Technical Data

| | |
|---|---|
| Material | AlSi12-LM6 |
| Housing color | RAL 9006 |
| Glass cover | safety flat glass |
| Application / optics | narrow street / R3 |
| LED lifetime | L80 > 100 000 h |
| SDCM | MacAdam 5 |
| Mounting | Post top |
| Bracket diameter | 60 mm |
| Tilting angle | ±3°, adjustable |
| Weight | 9,8 kg |
| Windage Area | 0,079 m² |
| Temperature | -40°C to +50°C |
| Nominal voltage | 220 - 240 VAC 50/60 Hz |

### Light file

LUN 1024 740 R3 400

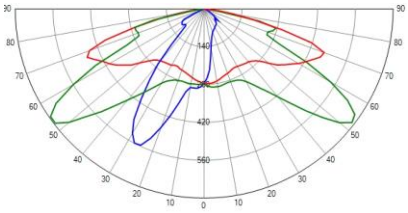

**more on the Internet**

### Specific data

| | |
|---|---|
| Color temperature | 4000 K |
| CRI | 75 |
| System light output | 3470 lm |
| Power consumption | 30,2 W |
| Ø 0 h - 100 000 h | 31,6 W |
| > 100 000 h | 33 W |
| System efficacy | 115 lm/W |
| LED current | 400 mA |
| cos Phi | 0,97 |
| Driver typ | Td60 |
| Surge protection | 10 kV / 6 kV [1] |
| Inrush current | 32 A |

* Functions (more on request)
41 on / off
45 Luna Dimmer
53 Dali integrated

*all values at Ta =25°C*

[1] *Common Mode / Differential Mode*

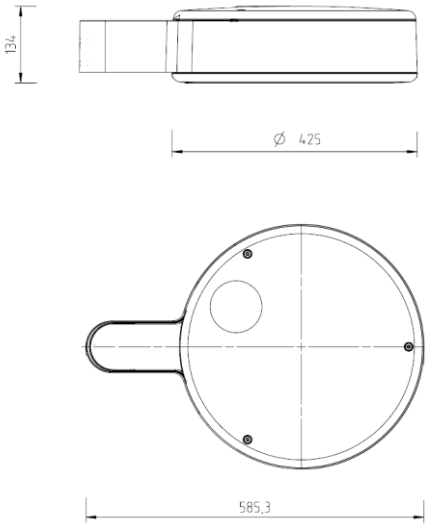


**Dimensional Drawing in mm**

SWARCO FUTURIT Verkehrssignalsysteme GesmbH
Vertrieb I Technik I Verwaltung, Mühlgasse 86, A-2380 Perchtoldsdorf, Austria, T. +43-1-8957924, F. +43-1-8942148
Produktion I Einkauf, Manfred-Swarovski-Straße 1, A-7343 Neutal, Austria, T. +43-2618-20025-0, F. +43-2618-20025-50
E: office.futurit@swarco.com, www.swarco.com

Version 7.190219



Changes, literal errors reserved