EN60598 IK08 IP66 RoHS **LUN 1018 P6 740 O7 350 9006 0 * yy**

LUNIA

With a modern, timeless design LUNIA LED street light can easily be recognized by its individual, unostentatious shape. LUNIA combines highest technical demands and design in a single high-quality product.

Technical Data

Material	AlSi12-LM6
Housing color	RAL 9006
Glass cover	safety flat glass
Application / optics	narrow street -S / O7
LED lifetime	L80 B10 > 100 000 h
SDCM	MacAdam 5
Mounting	Post top
Bracket diameter	60 mm
Tilting angle	±3°, adjustable
Weight	9,8 kg
Windage Area	0,079 m²
Temperature	-40°C to +35°C
Nominal voltage	220 - 240 VAC 50/60 Hz

Light file

LUN 1018 740 O7 350

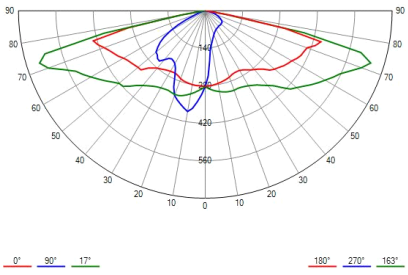

more on the Internet

Specific data

Color temperature	4000 K
CRI	75
System light output	2330 lm
Power consumption	20,4 W
Ø 0 h - 100 000 h	21,4 W
> 100 000 h	22,4 W
System efficacy	114 lm/W
LED current	350 mA
cos Phi	0,93
Driver typ	Td30
Surge protection	10 kV / 6 kV [1]
Inrush current	36 A

* Functions (more on request)
41 on / off
45 Luna Dimmer
53 Dali integrated

all values at Ta =25°C

[1] *Common Mode / Differential Mode*

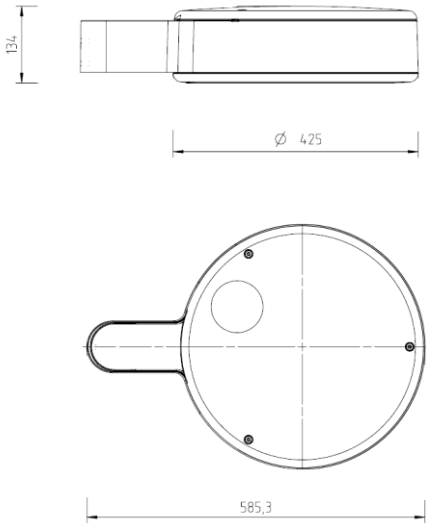

Dimensional Drawing in mm

SWARCO FUTURIT Verkehrssignalsysteme GesmbH
Vertrieb I Technik I Verwaltung, Mühlgasse 86, A-2380 Perchtoldsdorf, Austria, T. +43-1-8957924, F. +43-1-8942148
Produktion I Einkauf, Manfred-Swarovski-Straße 1, A-7343 Neutal, Austria, T. +43-2618-20025-0, F. +43-2618-20025-50
E: office.futurit@swarco.com, www.swarco.com

Version 7.190219

Changes, literal errors reserved